ADA Products

Your Leader In ADA Solutions

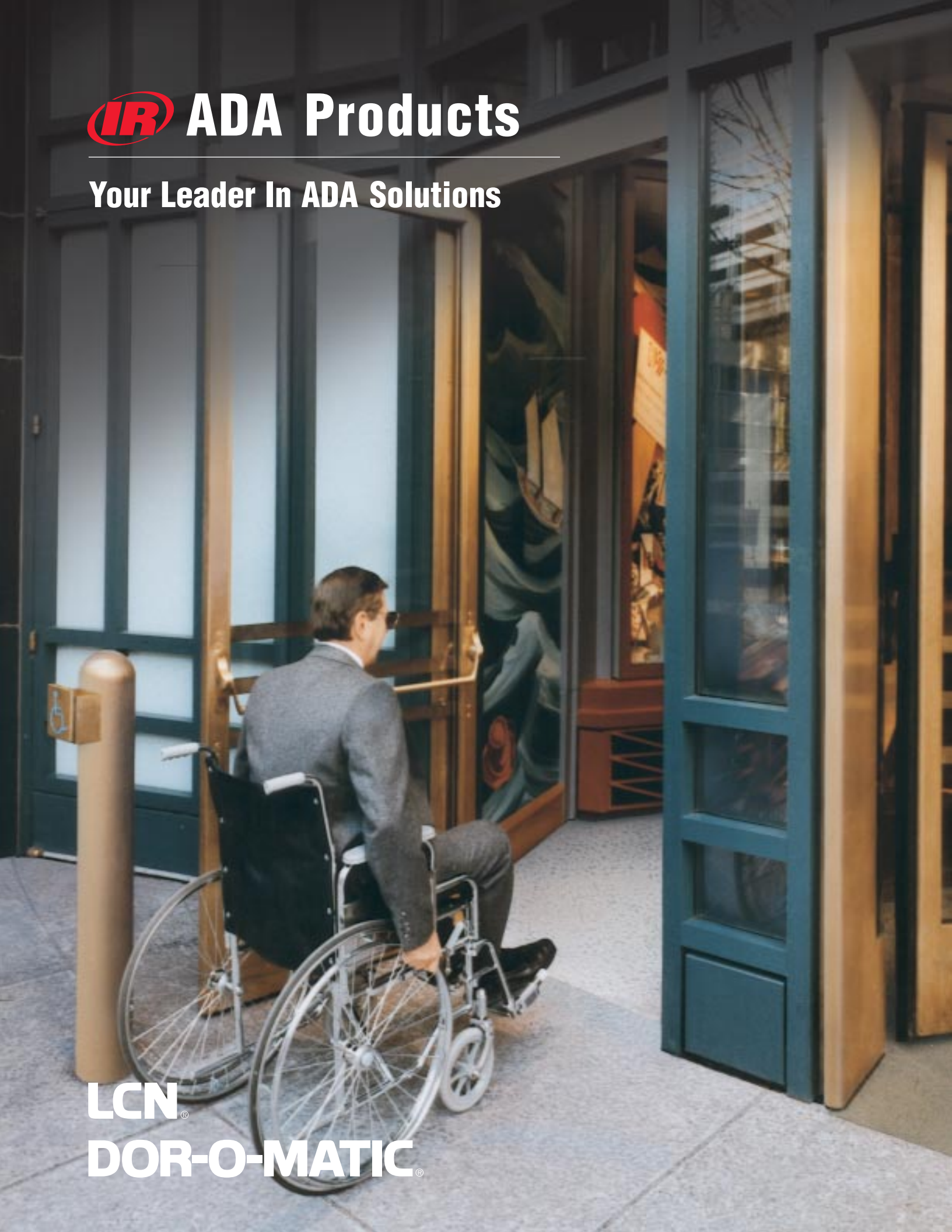

LCN®
DOR-O-MATIC®

- The proven standard in schools and healthcare facilities for over 20 years!
- 4 distinct low-energy products to meet all ADA applications
- Unique fast and accurate installation features
- Easy-to-adjust smart diagnostic controls
- Easily retrofitted into existing doors and frames as well as new construction

- Proven LCN and Dor-O-Matic ADA Door Operators
- Easy to Select, Install and Maintain
- Fully Integrated Solutions

IR Security & Safety
Proven Source. Proven Solutions.™

What is ADA?

The ADA is a civil rights law, not a building code. This act is designed to provide protection for people with disabilities. The law is divided into four major titles that prohibit discrimination against people with disabilities in Employment (Title 1), Public Service (Title II), Public Accommodations (Title III), and Telecommunications (Title IV). Title III concerns doors and door control.

What is the intent of ADA, Title III?

Essentially, owners of certain types of buildings must remove barriers and provide people with disabilities with access equal to, or similar to, that available to the general public.

How does ADA affect doors?

The ADA defines an "accessible" opening which means, among other things, providing a door with a minimum 32˝ (813mm) clear opening, easily manipulated handles, a maximum opening force, a minimum closing time, and capable of opening to at least 90°. IR Power Operators meet ADA requirements.

IR Security & Safety
Proven Source. Proven Solutions.™

Power Operators For Every

LCN POWER OPERATORS

Primarily Manual Opening

With Available Push Button Assist

To be used when the primary use of the door is manual opening. The door will be manually opened most of the time and at the touch of a button, the door will open safely and automatically. LCN power operators control both the opening and closing motion of the door.

4600 Electric AutoEqualizer™

4630 shown

Smart & Reliable:

Digital Control Suite

- NEW Digital Control Suite for easy installation & setup
- Complete unit tested to over 3 Million cycles, 10 times the industry standard!
- Integrates LCN's **10 Million Cycle** Heavy Duty 4040 Door Closer
- Complete On-Board Diagnostics ensures trouble-free installation
- No-Destruct Feature ensures long-life even in abusive applications
- Convenient On-Board Power Supply to power actuators, electric strikes and peripherals
- Backup Factory-Default Memory allows you to reset the unit to default settings
- Quick Plug-and-Play connections makes sensor integrations simple & fast
- Electro-hydraulic unit
- No guard rails or safety mats required due to low-energy design
- Mounting Configurations:
  - Surface mount top jamb (pull and push side)
- Available in seven standard or optional 180 custom powder-coated finishes

4800 Pneumatic AutoEqualizer™

4810 Shown

Multi-Door System:

- Ideal for multiple door applications since cost per door leaf decreases significantly as door leaves increase.
- Complete unit tested to over 3 Million cycles, 10 times the industry standard!
- Integrates LCN's **10 Million Cycle** Heavy Duty 4040 Door Closer
- Pneumatic door control provides quiet, efficient and very reliable operation
- Pneumatic operation allows use in hazardous areas where electrically operated devices would not be permitted
- Heavy Duty control boxes can be supplied with integral compressor for independent operation or can be plumbed into existing building air supply
- Available with "Blow Open" control box that is controlled by smoke evacuation system
- Hydro-pneumatic unit
- No guard rails or safety mats needed due to low-energy design
- Mounting Configurations:
  - Surface mount top jamb (pull and push side)
  - Door mount parallel arm
  - Overhead concealed
- Available in seven standard or optional 180 custom powder-coated finishes

Actuators and Accessoriers For All IR

Hardwired Actuators:

Wall Mount
- Stainless steel plate
- Engraved symbol conforms to entrance accessibility codes
- Available in 6″ or 4-1/2″ diameters

Jamb Mount
- Stainless steel plate
- Mounts in door jamb as narrow as 1-3/4″

Touchless
- Triggered by movement near the face of the actuator

Wireless (RF) Actuators:

Surface Mount
- 9V battery powered
- Stainless steel plate - 4-1/2″ diameter
- Weather resistant

Bollard Mount
- 9V battery powered
- Stainless steel plate - 6″ diameter
- Weather resistant

Handheld
- 9V battery powered

ADA Application

DOR-O-MATIC POWER OPERATORS

Primarily Automatic Opening

To be used when the primary use of the door is for automatic opening. The door will be automatically opened most of the time and can be manually opened when needed.

Senior Swing™

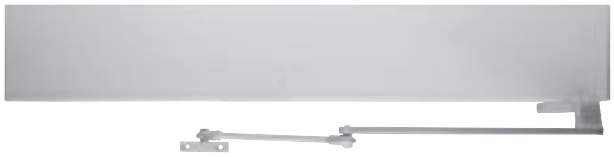

Reliable with Power Boost:

- Power Boost Assisted closing assures secure latching regardless of drafts, wind gusts, or pressure differentials
- Complete unit tested internally to over **10 Million cycles**!
- Microprocessor control box for reliability
- Push'N' Go feature for automatic requirements without the added expense of optional activation accessories
- Auto Reverse on opening cycle – provides safety by reversing direction when coming into contact with a person/object
- Bottom load capability for simplified field adjustability and quicker installations
- Full-length covers available to cover entire doors or pairs of doors for an appealing appearance.
- Encased gears and controls for longer lasting protection against grime buildup and the elements
- Electromechanical unit and microprocessor controls for state of the art programmability
- No guard rails or safety mats needed due to low-energy design
- Mounting Configurations:
  - Surface applied with either push or pull arm
  - Overhead concealed with center hung or butt hung application arm
- Available in Aluminum or Dark Bronze, painted and clad units

Benchmark

Value Engineered:

- A durable product that combines state-of-the-art technology with affordability
- Complete unit tested to over 3 Million cycles, 10 times the industry standard!
- Microprocessor control box for reliability
- Push'N' Go feature for automatic requirements without the added expense of optional activation accessories
- Auto Reverse feature on opening cycle provides safety by reversing direction when coming into contact with a person or object
- Available On-Board Power Supply to power actuators, electric strikes and peripherals
- Full-length covers available to cover entire door opening
- Adjustable manual opening force to maximize on site adjustment requirements
- Electromechanical unit
- No guard rails or safety mats needed due to low-energy design
- Mounting Configurations:
  - Surface applied with either push or pull arm
- Available in Aluminum or Dark Bronze

Power Operators:

Wireless (RF) Receivers:

Handheld

- For use with wireless (RF) actuators

Sensors:

Motion Sensor

- Detects objects approaching or moving away from sensor

Sensor Remote Control

- Remotely adjusts settings on the Motion Sensor

Header Mount

- Infrared presence detector protects people on the swing side of the door

Door Mount

- Infrared presence detector protects people on the swing path of the door

Accessories:

Bollard Post

- 6˝ square aluminum post; 36˝ height
- Can be configured as a wireless (RF) or as a hardwired actuator

ADA Products

Typical Integrated Solution:

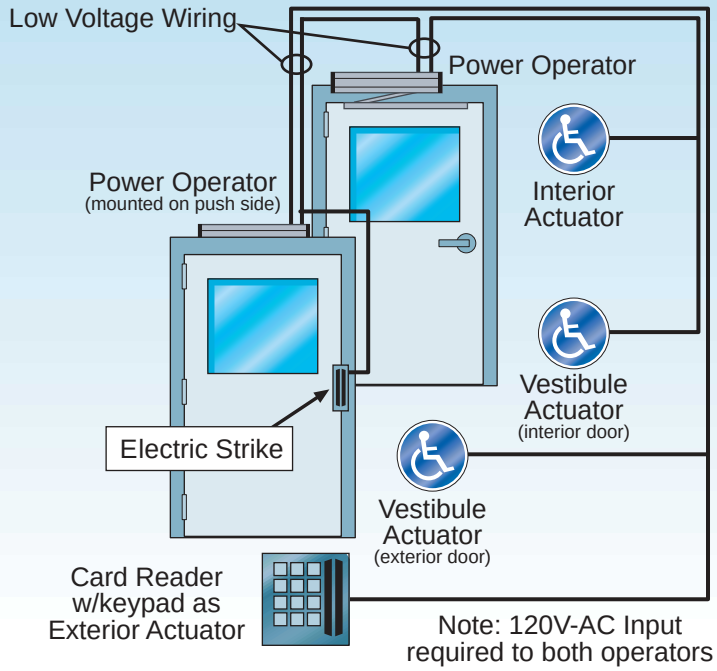

Your IR Security and Safety Consultants provide additional support in integrated solutions in areas such as:

- Electronic Support Services
- Security Solutions
- Fire and Life Safety Compliance
- Hardware Applications
- Specialty Applications

To locate your regional IR Security and Safety Consultant, go to
www.irsecurityandsafety.com/support/consultants.htm

Security & Safety
Proven Source. Proven Solutions.™

LCN
121 West Railroad Avenue
Princeton, IL 61356-0100
800 526 2400
Fax: 800 248 1460
www.lcnclosers.com

Dor-O-Matic
Automatic Door Products
7350 West Wilson Avenue
Harwood Heights, IL 60706-4708
708 867 7400 800 543 4635
Fax: 708 867 0291
www.doromatic.com

©2002 Ingersoll-Rand Form LC-1001 Rev. 10/02 Printed in USA

An Ingersoll-Rand business